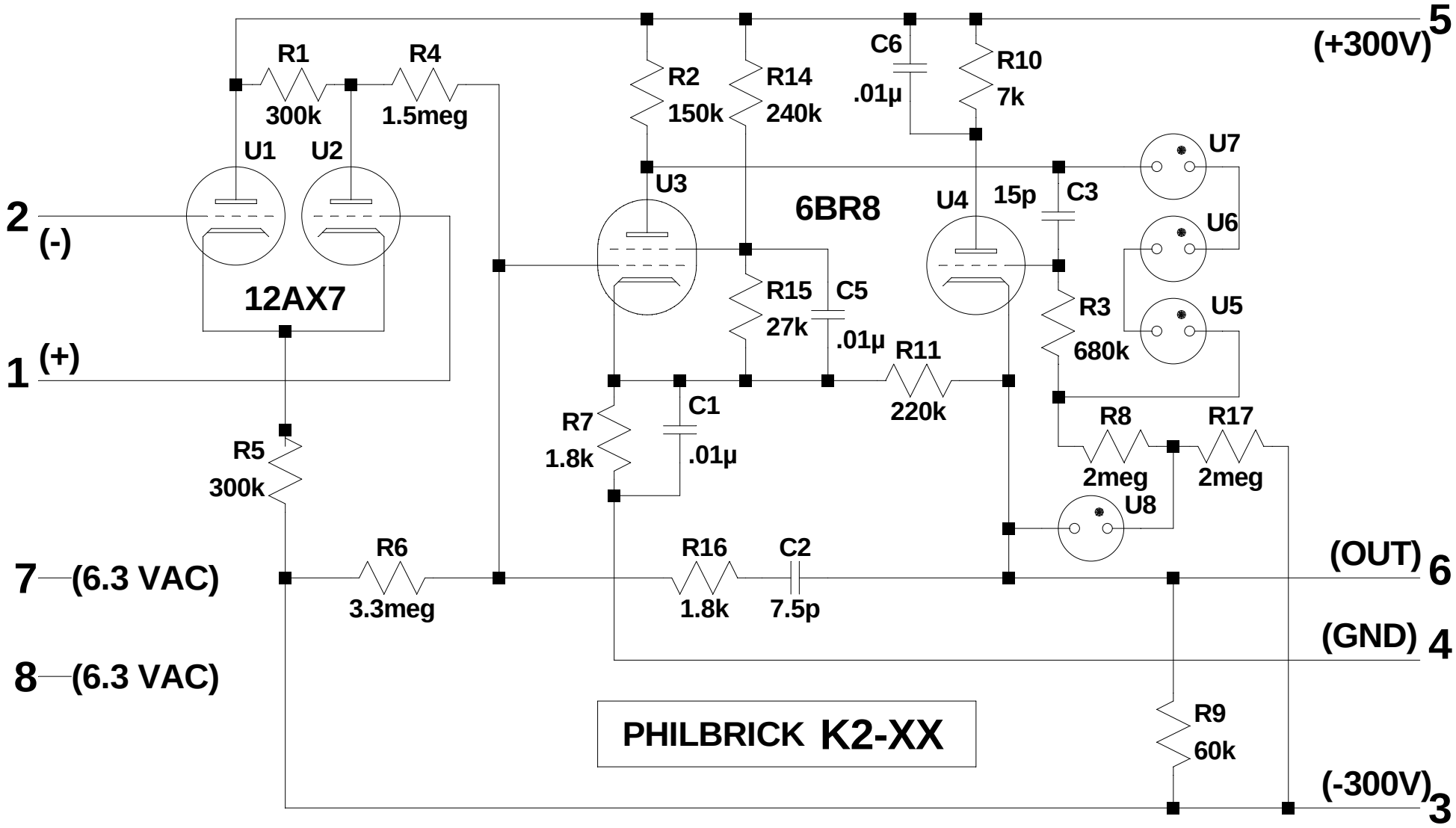
5
(+300V)
R1
300k
R4
1.5meg
U1
U2
2
(-)
12AX7
1
(+)
R5
300k
7
(6.3 VAC)
8
(6.3 VAC)
R6
3.3meg
R2
150k
R14
240k
C6
.01µ
R10
7k
U3
6BR8
U4
15p
C3
U7
U6
U5
R15
27k
C5
.01µ
R11
220k
R3
680k
R7
1.8k
C1
.01µ
R8
2meg
R17
2meg
U8
R16
1.8k
C2
7.5p
(OUT)
6
(GND)
4
R9
60k
(-300V)
3
PHILBRICK K2-XX